12400 ROSE ROAD
WILLIS, TX 77378

Phone 936.856.5529
Fax 936.856.8550
E-Mail info@hrmfg.com
Web Site www.hrmfg.com

OVER 35 YEARS OF SERVICE

TO THE WORKHOLDING INDUSTRY

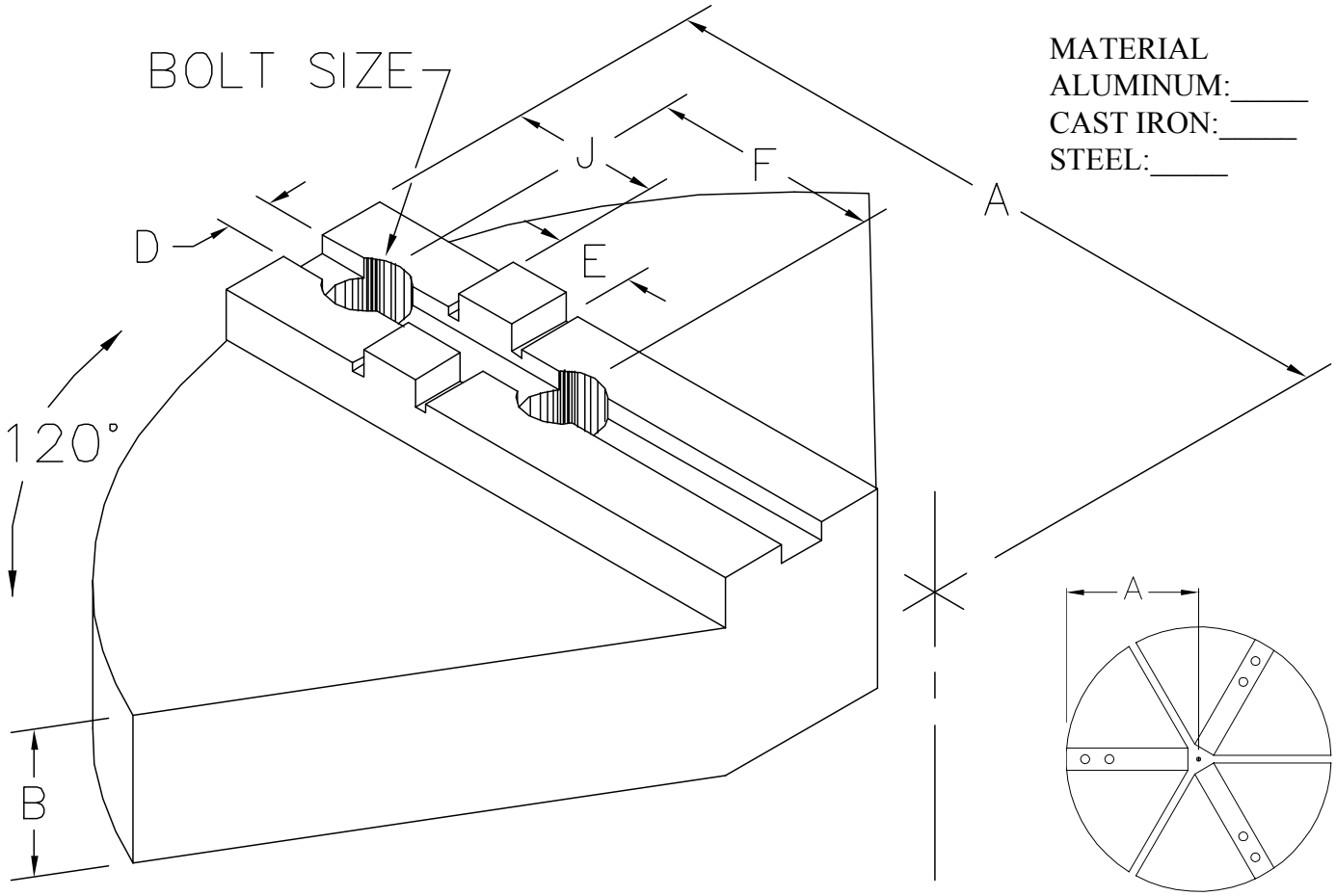

MATERIAL
ALUMINUM:_____
CAST IRON:_____
STEEL:_____

AMERICAN STANDARD TONGUE & GROOVE FULL WRAP JAWS

A	B	D	E	F	J	BOLT

DATE:_____ **QTY:**_____ **APPROVED BY**_____

NOTES: